kolpa·san®
by kolpa

SPLOŠNO NAVODILO ZA MONTAŽO PODNOŽJA

OPĆE UPUTSTVO ZA MONTAŽU POSTOLJA

Nr.MK 12

C160-180

1/4

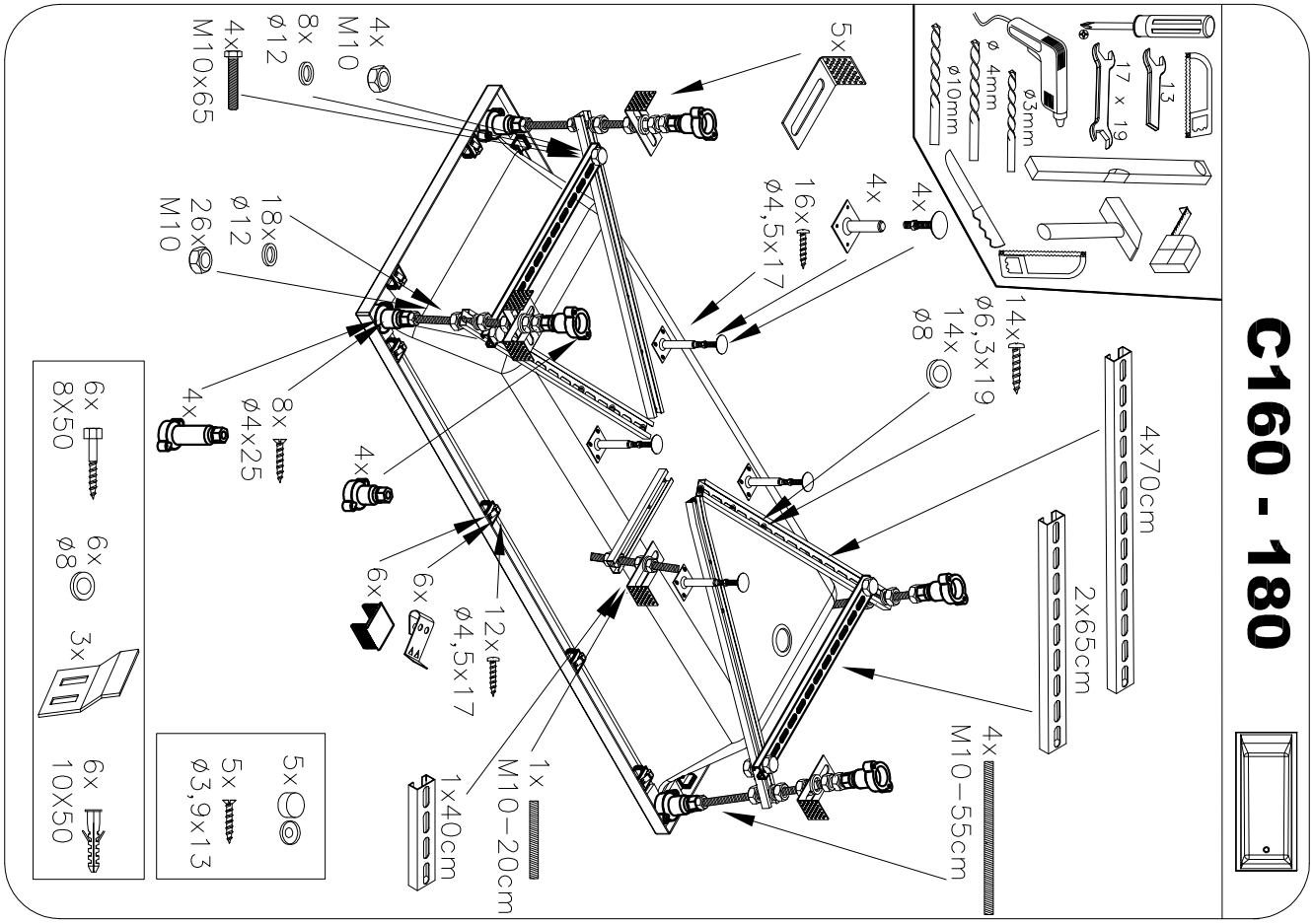

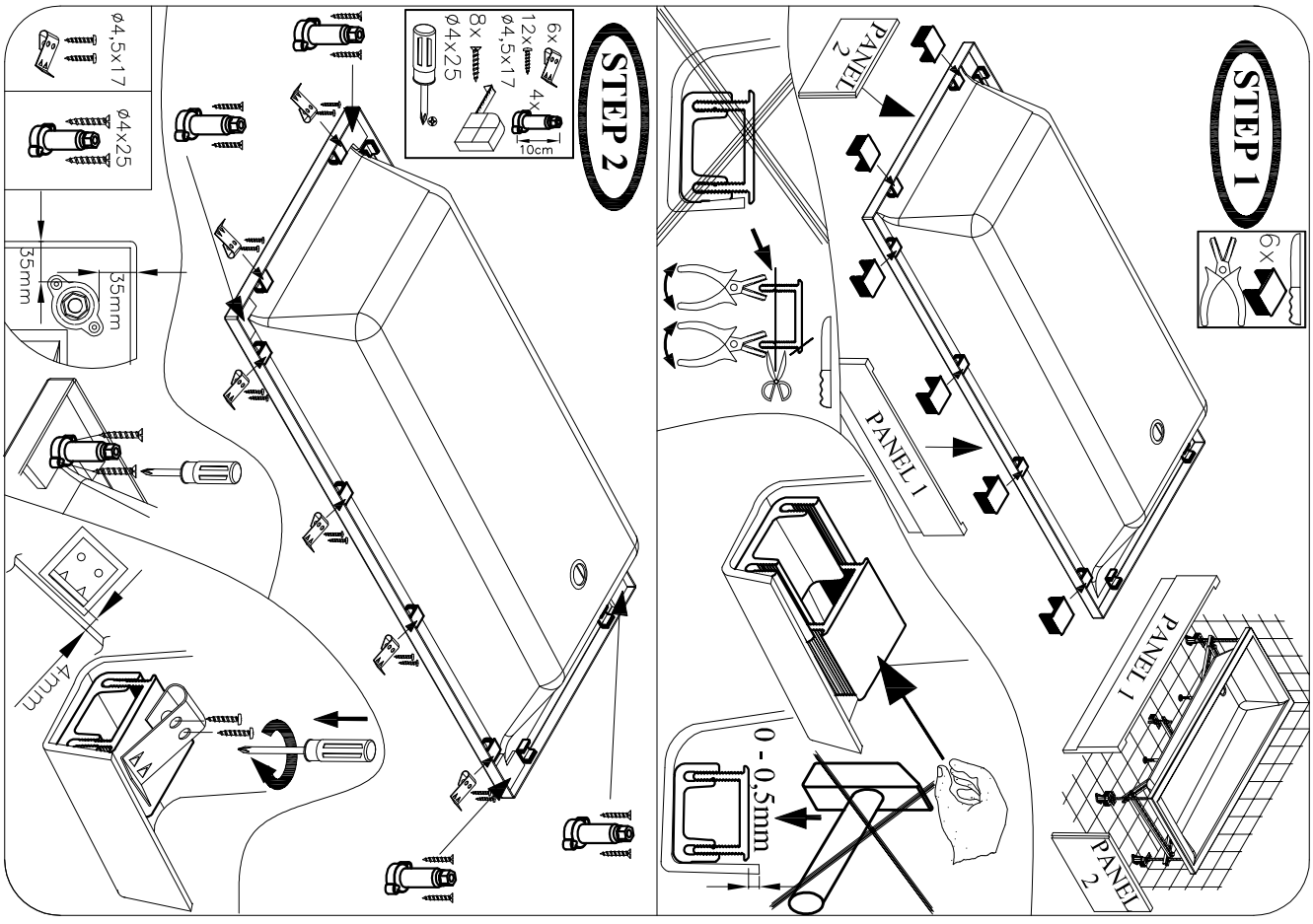

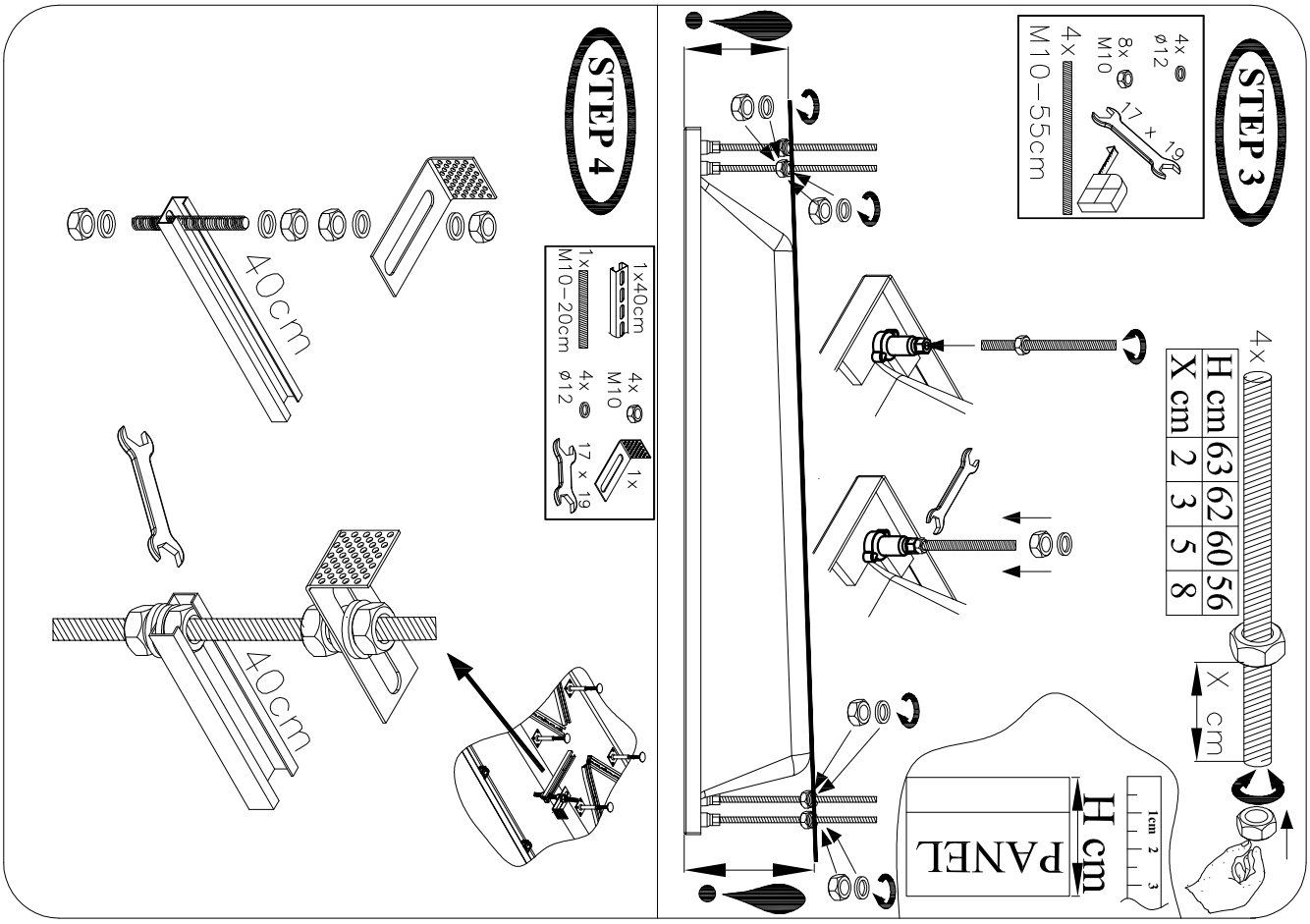
STEP 3
4x ø12
8x M10
4x M10–55cm
17 + 19
4x
H cm 63 62 60 56
X cm 2 3 5 8
X cm
PANEL
H cm
1cm 2 3
STEP 4
1x40cm
1x M10–20cm
4x M10
4x ø12
1x
17 x 19
40cm
40cm

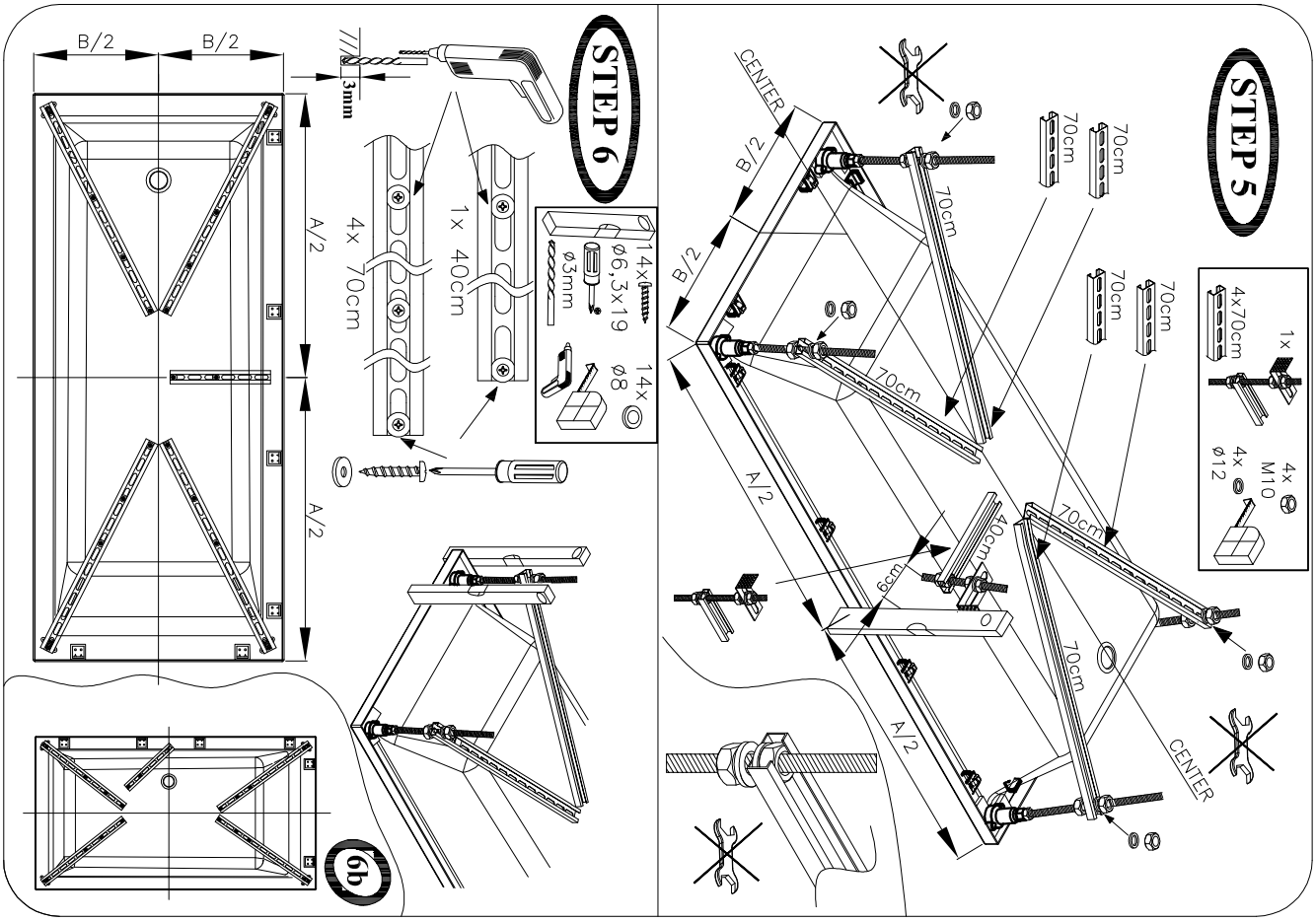
STEP 5
1x
4x70cm
4x M10
4x ø12
70cm
70cm
70cm
70cm
70cm
70cm
70cm
70cm
40cm
6cm
B/2
B/2
B/2
A/2
A/2
A/2
CENTER
CENTER
STEP 6
14x
ø6,3x19
ø3mm
14x ø8
1x 40cm
4x 70cm
3mm
B/2
B/2
A/2
A/2
6b

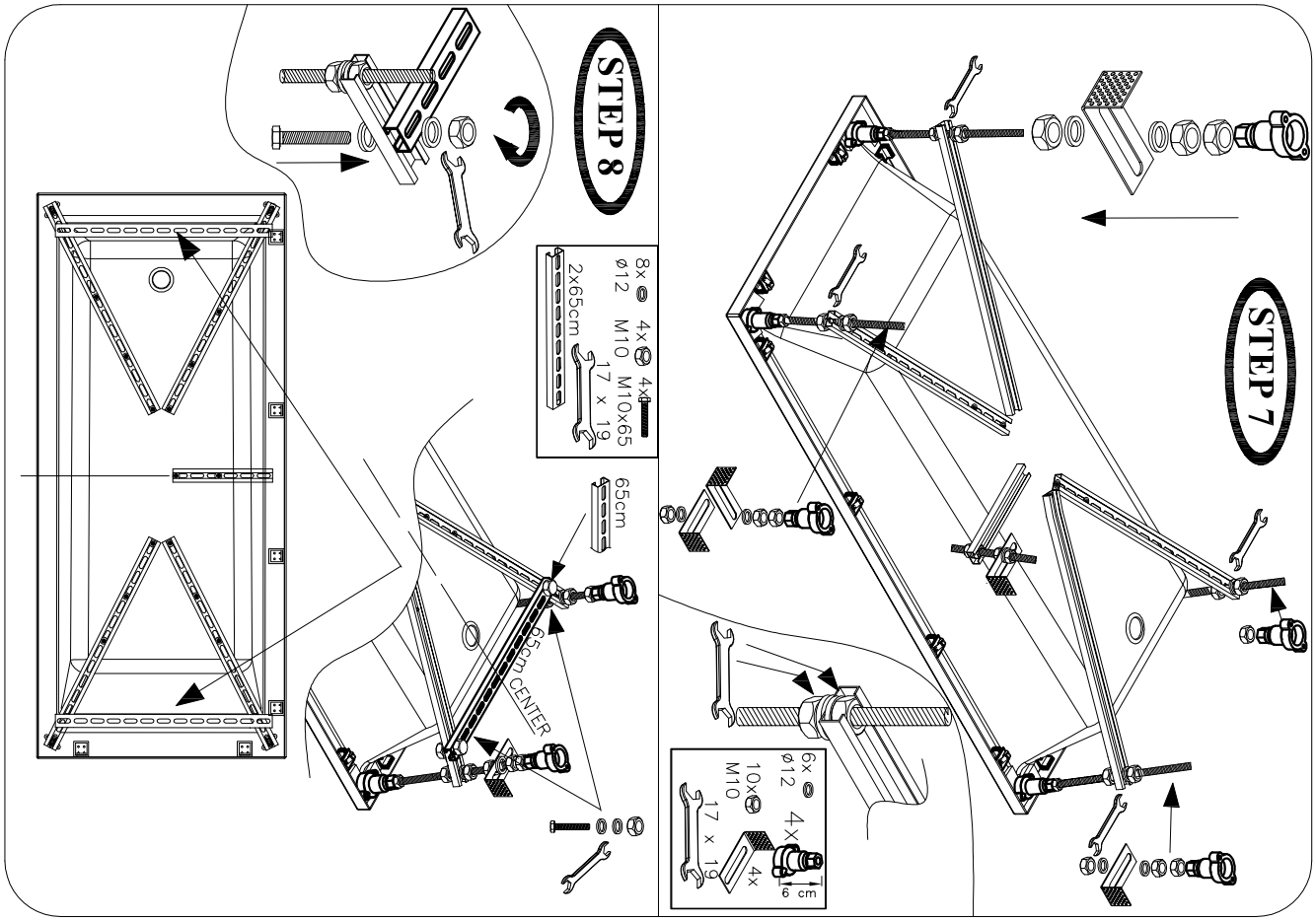
STEP 7
6x ø12
4x
6 cm
10x M10
4x
17 x 19
STEP 8
8x ø12
4x M10
4x M10x65
17 x 19
2x65cm
65cm
65cm CENTER

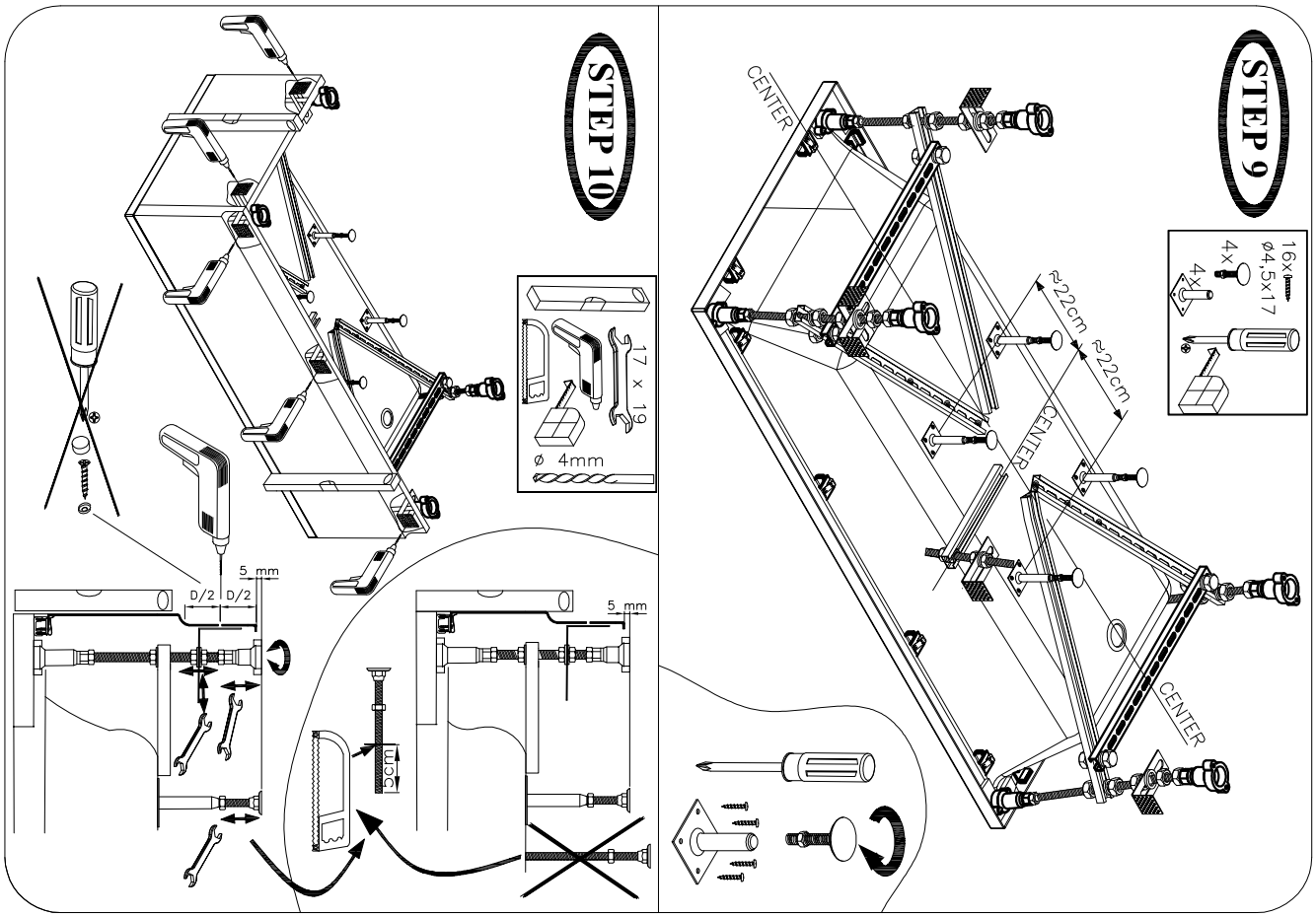
STEP 9
16x ø4,5x17
4x
4x
≈22cm
≈22cm
CENTER
CENTER
CENTER
STEP 10
17 x 19
ø 4mm
5 mm
D/2 D/2
5 mm
cm

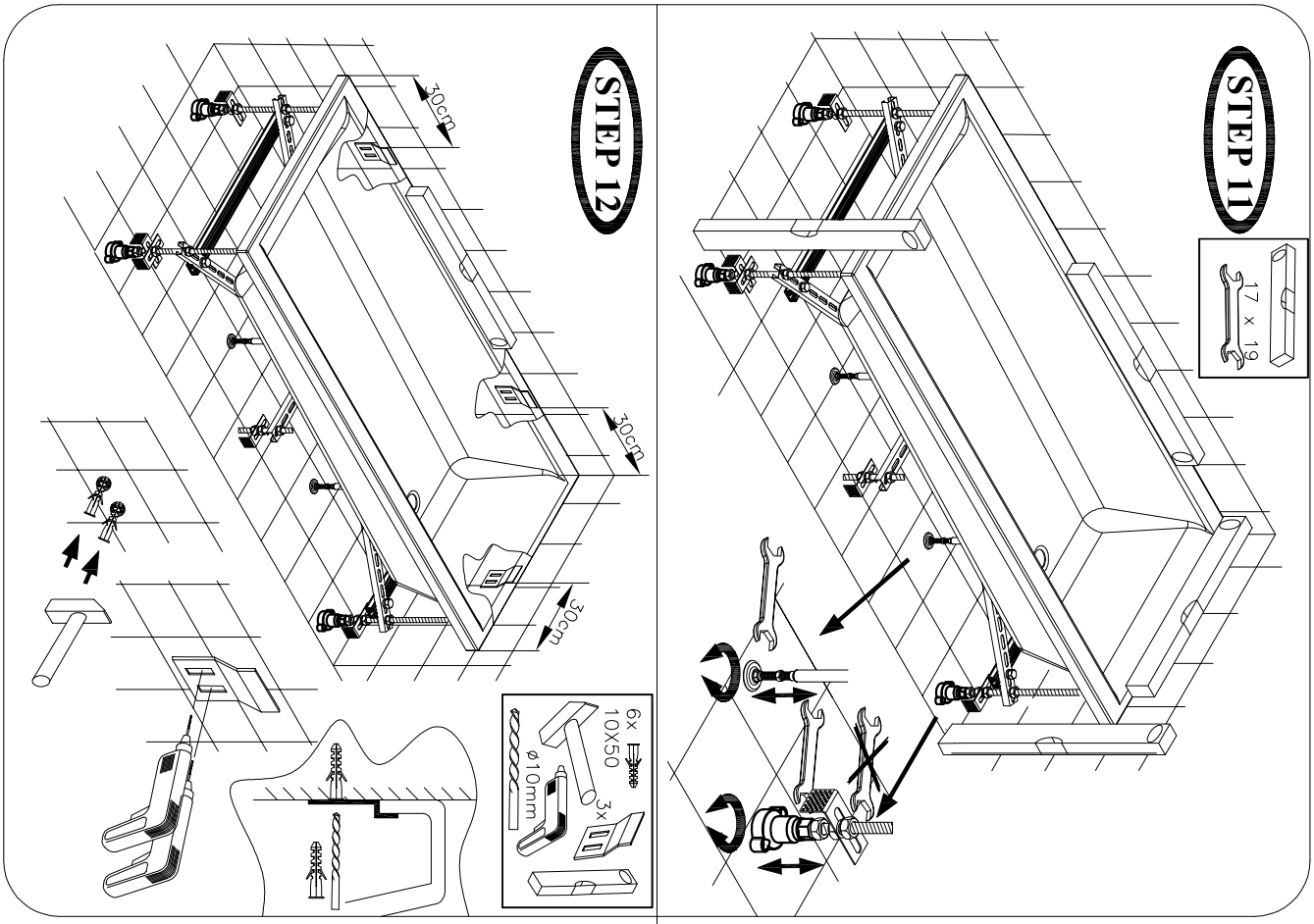
STEP 11
17 x 19

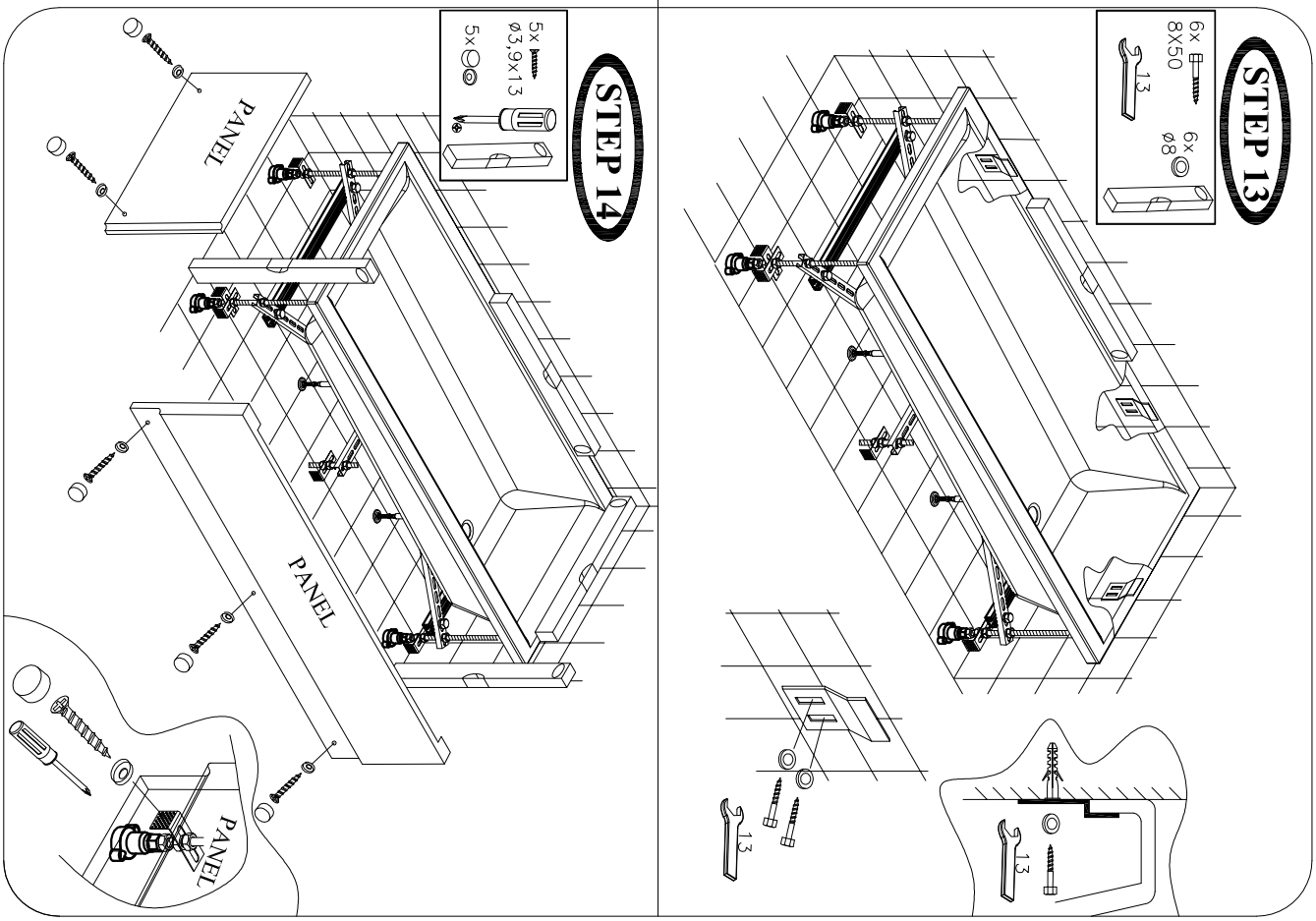
STEP 12
30cm
30cm
30cm
6x
10X50
3x
ø10mm

STEP 13
6x
8X50
13
6x
ø8
13
13

STEP 14
5x
ø3,9x13
5x
PANEL
PANEL
PANEL